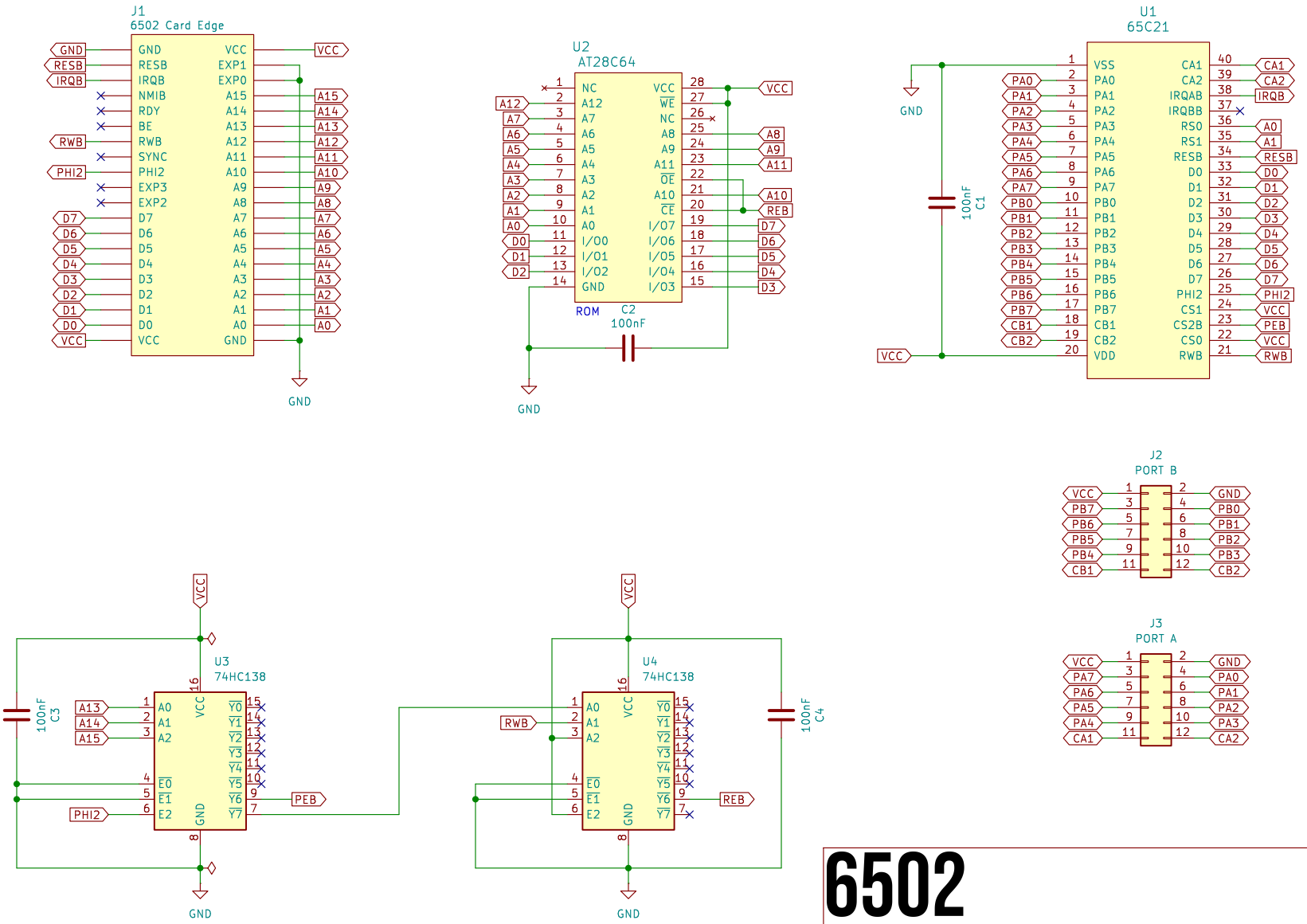

6502

A.C. Wright Design

Sheet: /

File: Keypad Expander.kicad_sch

Title: 6502 Keypad Expander

Size: USLetter	Date: 2026-04-02	**Rev: 1.0**
KiCad E.D.A. 9.0.7		Id: 1/1